ENGINE STAND

Distributed by Kincrome Group www.kincromegroup.com

Owner’s Assembly and Operating Manual

SPECIFICATIONS 2
IMPORTANT SAFETY INFORMATION 3
UNPACKING AND ASSEMBLING STAND 3
Unpacking Carton 3
Assembling Engine Stand 3
USING ENGINE STAND 4
Preparing Work Area 4
Supporting an Engine 4
Working on Engine 4
MAINTENANCE AND STORAGE 5
Cleaning 5
Storage 5
Repairing Engine Stand 5

SPECIFICATIONS

Working Load limit	566 KG
Working Height	945 mm
Total Weight:	28 KG
Part Number	K12046

IMPORTANT SAFETY INFORMATION

The use of an engine stand has inherent dangers to avoid risk of personal injury or property damage make sure you are fully aware of the operating instructions for this product. Do not exceed the working load limit of this engine stand. This engine stand is intended for automotive use only. Be aware that large or heavy engines may exceed stands stated capacity check vehicle owners manual or contact the engine manufacturer. Do not use for any other purpose accept to support an engine during maintenance.

UNPACKING AND ASSEMBLING STAND

Unpacking Carton

Place carton in a clear, open area such as garage floor. Remove components and lay them out neatly on selected work surface. Make sure all nuts, bolts, washers, and pins, are properly identified and placed safely until needed

Assembling Engine Stand

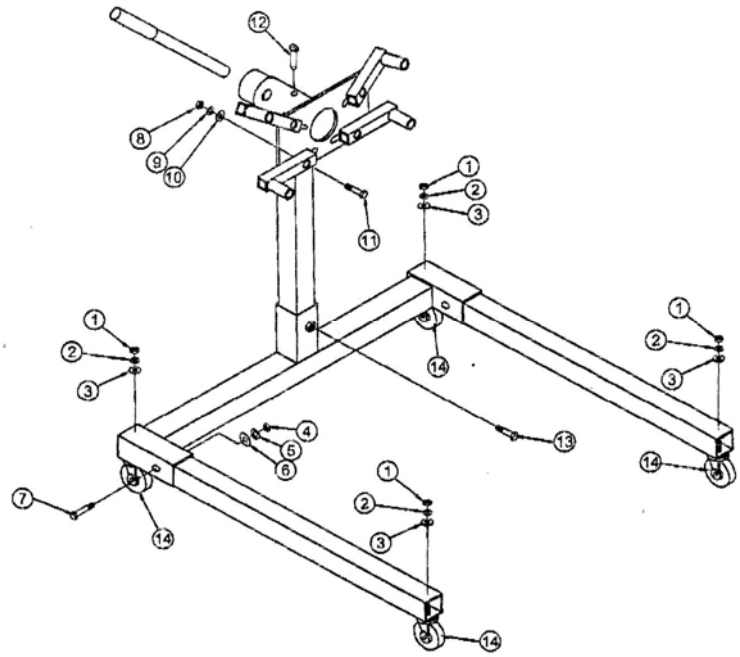

Step 1

Insert main up right into base position and secure using bolt #13

Step 2

Insert legs into base bar and secure using bolt #7, washer #6 lock washer #5 and nut #4.

Step 3

Attach front castor wheels #14 using washer #3 lock washer #2 and nut #1

Step 4

Attach rear castor wheels #14 using washer #3 lock washer #2 and nut #1

Step 5

Attach engine mounts to face plate hold loosely with bolt #11, washer #10, Lock washer #9, and nut #8. Place assembled face plate into stand upright and hold in place with pin #12

Step 6

Recheck all nuts and bolts are tight and that stand is stable when placed on a flat level surface

MAINTENANCE AND STORAGE

Cleaning

Engine stand should be wiped clean with soft cloth only. Do not use gasoline, kerosene, or other such solvents or any abrasive cleanser as cleaning agents and solvents as they will cause deterioration of the painted finish exposing the product to rust.

Storage

Store engine stand in a clean environment preferably indoors, in a dry area to protect stand from moisture.

Repairing Engine Stand

There are no user serviceable parts, only trained, licensed and certified repair personnel should attempt any repairs. Any modifications to this engine stand, except those performed by the manufacturer, or their designee, will void all warranties both written an implied.

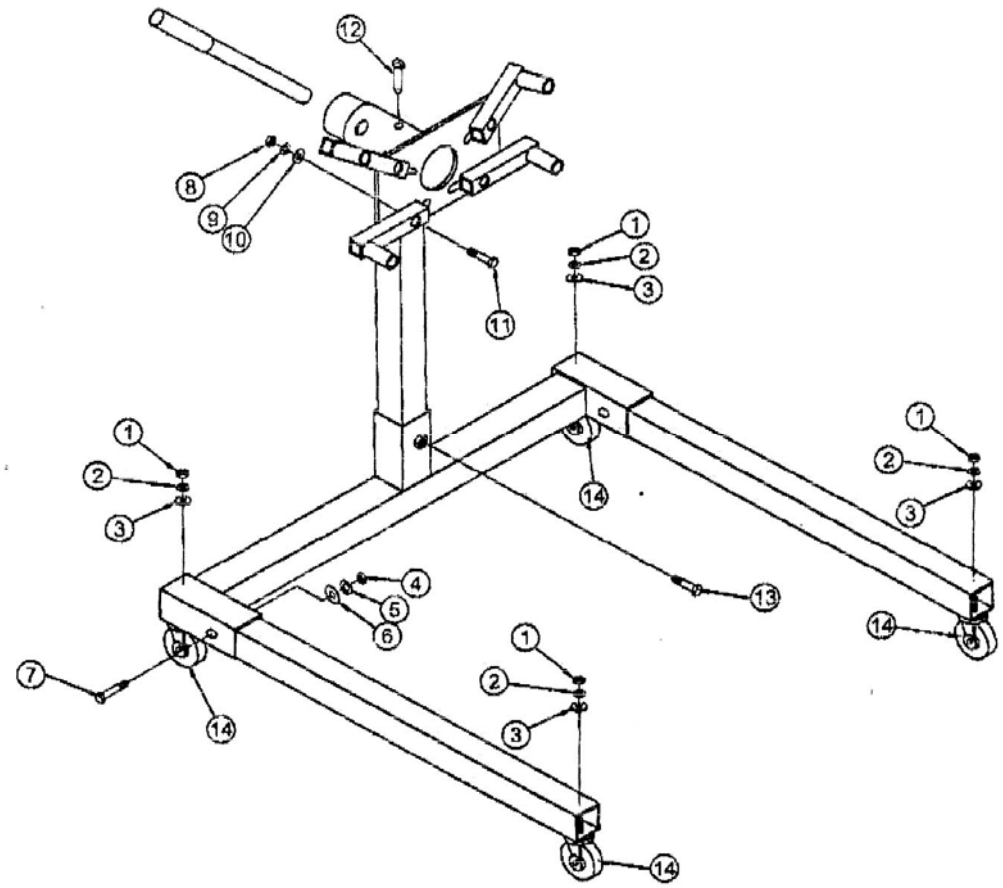

Item	Description	Q'ty
1	M12 Nut	4
2	M12 Lock washer	4
3	M12 Washer	4
4	M12 Nut	2
5	M12 Lock washer	2
6	M12 Washer	2
7	M12 x 90 mm Bolt	2
8	M14 Nut	4
9	M14 Lock washer	4
10	M14 Washer	4
11	M14 X 60 mm Bolt	4
12	Pin	1
13	M12 x 25 mm Bolt	1
14	Caster	4

Distributed by Kincrome Group **www.kincromegroup.com**
3 Lakeview Drive Scoresby Victoria
Phone: 1300 657 528